1^ Coppa Italia Bormio

Bormio SO

11-12 ottobre 2025

QUALIFYING

GP 1 **1500** **(24 competitors)**

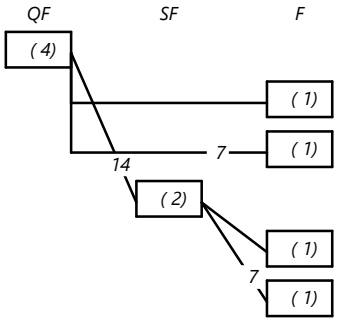

Quarter Finals
Final
Final
Semi Final
Final
Final

GP 1 **1000** **(24 competitors)**

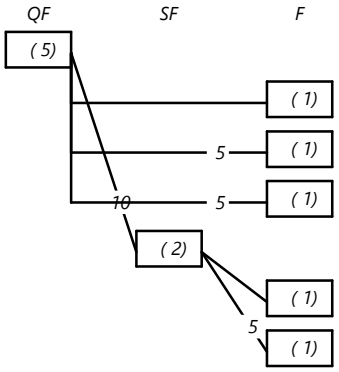

Quarter Finals
Final
Final
Final
Semi Final
Final
Final

GP 1 **500** **(24 competitors)**

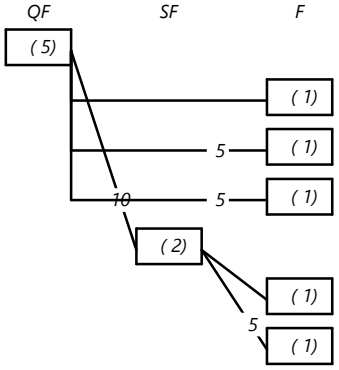

Quarter Finals
Final
Final
Final
Semi Final
Final
Final

1^ Coppa Italia Bormio

Bormio SO

11-12 ottobre 2025

QUALIFYING

GP 2 **1500** **(24 competitors)**

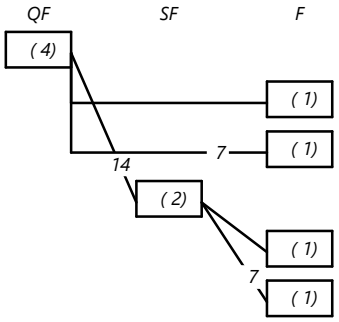

Quarter Finals
Final
Final
Semi Final
Final
Final

GP 2 **1000** **(24 competitors)**

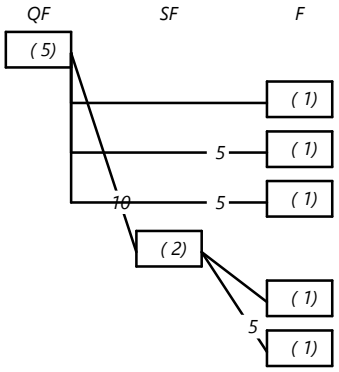

Quarter Finals
Final
Final
Final
Semi Final
Final
Final

GP 2 **500** **(24 competitors)**

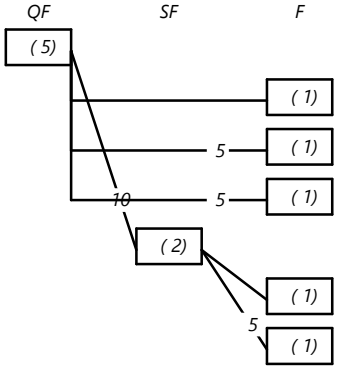

Quarter Finals
Final
Final
Final
Semi Final
Final
Final

1^ Coppa Italia Bormio

Bormio SO

11-12 ottobre 2025

QUALIFYING

GP 3 **1500** **(28 competitors)**

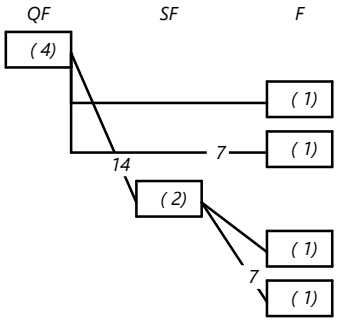

Quarter Finals
Final
Final
Semi Final
Final
Final

GP 3 **1000** **(28 competitors)**

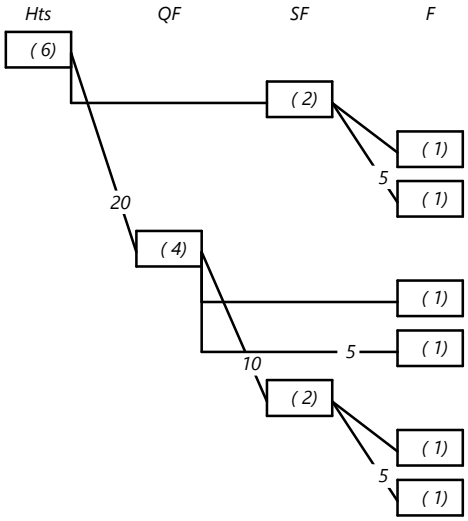

Heats
Semi Final
Final
Final
Quarter Finals
Final
Final
Semi Final
Final
Final

GP 3 **500** **(28 competitors)**

1^ Coppa Italia Bormio

Bormio SO

11-12 ottobre 2025

QUALIFYING

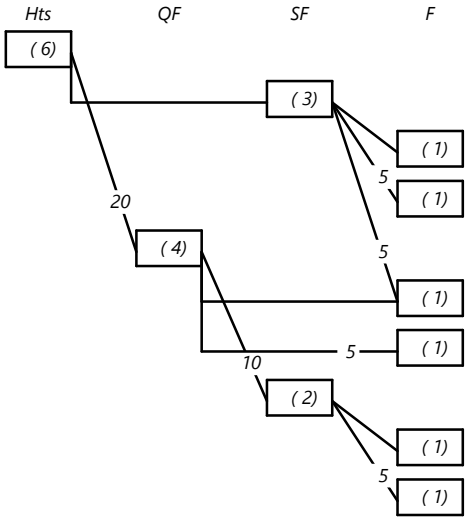

Heats

Semi Final

Final

Final

Quarter Finals

Final

Final

Semi Final

Final

Final

GP JD **1000** **(36 competitors)**

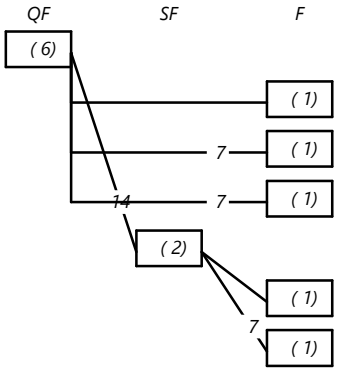

Quarter Finals

Final

Final

Final

Semi Final

Final

Final

GP JD **500** **(36 competitors)**

1^ Coppa Italia Bormio

Bormio SO

11-12 ottobre 2025

QUALIFYING

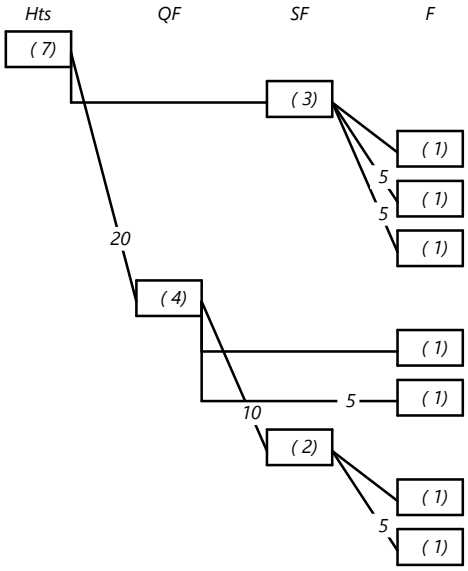

Heats
Semi Final
Final
Final
Final
Quarter Finals
Final
Final
Semi Final
Final
Final

GP JD **333** **(36 competitors)**

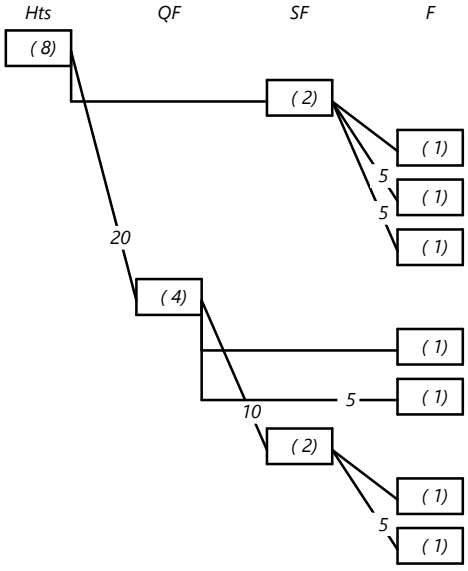

Heats
Semi Final
Final
Final
Final
Quarter Finals
Final
Final
Semi Final
Final
Final

GP1W **R3K** **(0 competitors)**



Final

GP2W **R3K** **(0 competitors)**



Final

1^ Coppa Italia Bormio

Bormio SO

11-12 ottobre 2025

QUALIFYING

GP1M **R3K** **(0 competitors)**

F

(2)

Final

GP2M **R3K** **(0 competitors)**

F

(2)

Final

GPDW **R2K** **(0 competitors)**

F

(2)

Final

GPDM **R2K** **(0 competitors)**

F

(2)

Final